Hitachi Compressor World-Wide Sales Service Network (Main Office)

Canada
Hitachi Canada Ltd.
(Calgary Office)
Suite 460, 10655 Southport Road S.W.
Calgary, Alberta T2W 4Y1
Phone: <1> (403) 278-1881
Fax: <1> (403) 278-1810

U.S.A
Hitachi America, Ltd.
(Headquarters)
50 Prospect Avenue Tarrytown,
NY 10591-4625
Phone: <1> (914) 332-5800
Fax: <1> (914) 332-5555, -5834, -5835

(Houston Office)
9700 Richmond Avenue, Suite 165
Houston, TX 77042
Phone: (713) 782-0529
Fax: (713) 782-0981

Mexico
Hitachi Mexico, S.A. de C.V.
Andres Bello No. 10 Piso 10 Col.
Chapultepec Polanco 11560,
Mexico, D. F.
Phone: <52> (55) 5282-9040
Fax: <52> (55) 5282-9042

Venezuela
Hitachi de Venezuela, C.A.
Av. Ppal de La Castellana con
Av. Jose Angel Lamas,
Torre La Castellana, Piso 5, Ofic. A,
La Castellana,Caracas 1060-Venezuela
Phone: <58> (212) 265-5995, -7719
Fax: <58> (212) 261-3645, -2621

Brazil
Hitachi Brasil Representações Ltda.
Av. Paulista 854-7° Andar Cj. 72
Edificio Top Center
CEP 01310-913 São Paulo-S.P. Brazil
Phone: <55> (11) 3284-0922
Fax: <55> (11) 3287-2781

Argentina
Hitachi Argentina S.A.
Carlos Pellegrini 1363
1 Piso, (C1011AAA) Buenos Aires,
Argentina
Phone: <54> (11) 4394-5452, -5461
Fax: <54> (11) 4394-5416

U.K.
Hitachi Plant Technologies, Ltd.
(London Office)
83 Baker Street, London, W1U 6LA
Phone: <44> (20) 7034-7375
Fax: <44> (20) 7034-7116

Russian Federation
Hitachi, Ltd.
(Moscow Office)
Millennium House, 12, Trubnaya Moscow,
107045, Russian Federation
Phone: <7> (495) 787-4020
Fax: <7> (495) 787-4021

Saudi Arabia
Hitachi Plant Technologies, Ltd.
(Saudi Arabia Branch)
Al Olaya CenterOffice No.102, Makkah Road,
West Khobar Al-Khobar Kingdom Of Saudi Arabia
Phone: <966> (3) 896-1462

U.A.E.
Hitachi Plant Technologies, Ltd.
(Middle East Regional Headquarter)
Albwardy Building 3rd Floor (3C),
Khalid Bid Waleed Street (Bank Street),
P. O. Box 62438, Dubai, U.A.E.
Phone: <971> (4) 352-2388
Fax: <971> (4) 352-2385

Egypt
Hitachi, Ltd.
(Egypt Office)
Cairo Center Building (14th floor)
2, Abdul Kader Hamza Street,
106 Kasr El Aini Street, Garden City
Cairo, Egypt
Phone: <20>(2)2795-4972
Fax: <20>(2)2795-4973

India
Hitachi Plant Technologies, Ltd.
(Mumbai Branch Office)
707, Trade Centre, Opp. to MTNL Bldg
Bandra-Kurla Complex, Bandra (East)
Mumbai 400 098.
Phone: <91> (22)2650-0031
Fax: <91> (22)2650-0032

Singapore
Hitachi Asia Ltd.
7 Tampines Grande, #08-01 Hitachi Square,
Singapore 528736
Phone: <65> 6535-2100
Fax: <65> 6538-9011

Hitachi Plant Technologies, Ltd.
(Asia Regional Headquarters)
Haw Par TechnoCentre
401 Commonwealth Drive #04-02,
Har Par TechnoCentre,
Singapore 149598
Phone: <65> 6222-0665
Fax: <65> 6224-8358

Malaysia
Hitachi Asia (Malaysia) Sdn. Bhd.
Suite 17.3, Level 17, Menara IMC
(Letter Box No. 5)
No. 8 Jalan Sultan Ismail 50250 Kuala
Lumpur
Phone: <60> (3) 2031-8751
Fax: <60> (3) 2713-2855

Indonesia
Hitachi Asia Ltd.
(Jakarta Office)
MidPlaza 2, 24th Floor Jl. Jend.
Sudirman Kav. 10-11 Jakarta 10220,
Indonesia
Phone: <62> (21) 574-4313
Fax: <62> (21) 574-4312

Thailand
Hitachi Asia (Thailand) Co., Ltd.
18th Floor, Ramaland Building
952 Rama IV Road, Bangrak
Bangkok 10500
Phone: <66> (2) 632-9292
Fax: <66> (2) 632-9299

Vietnam
Hitachi Plant Technologies, Ltd.
(Hanoi Representative Office)
12A01 Viglacera Tower No.1
Lang Hoa Lac Street,
Me Tri Commune, Tu Liem District, Hanoi
Vietnam
Phone: <84> (43) 553-7100
Fax: <84> (43) 553-7103

China
Hitachi (China) Ltd.
(Beijing Headquarters)
18/F., Beijing Fortune Building
5 Dong San Huan Bei Lu Chao Yang District
Beijing 100004
Phone: <86> (10) 6590-8111
Fax: <86> (10) 6590-8110

(Taiwan Hitachi Asia Pacific Co., Ltd.)
3rd Floor, No.167, Tun Hwa N. Road,
Hung-Kuo Building, Taipei 105,
Taiwan
Phone: +886-2-2718-3666,
+886-2-2718-8777
Fax: +886-2-2545-8328

Korea
Hitachi, Ltd.
(Korea Branch)
7th floor, Hana Building,
1, Gongpyeong-dong, Jongno-gu,
Seoul, 110-160, Korea
Phone: <82> (2) 3210-3590
Fax: <82> (2) 3210-3596

Hitachi Plant Technologies, Ltd.

(Headquarters)
5-2, Higashi-Ikebukuro 4-chome, Toshima-ku, Tokyo, 170-8466
Phone: 〈81〉(3) 5928-8238 Fax: 〈81〉(3) 5928-8721

Printed in Japan(H) **MC-E218 1103**

HITACHI
Inspire the Next

Hitachi Reciprocating Compressors

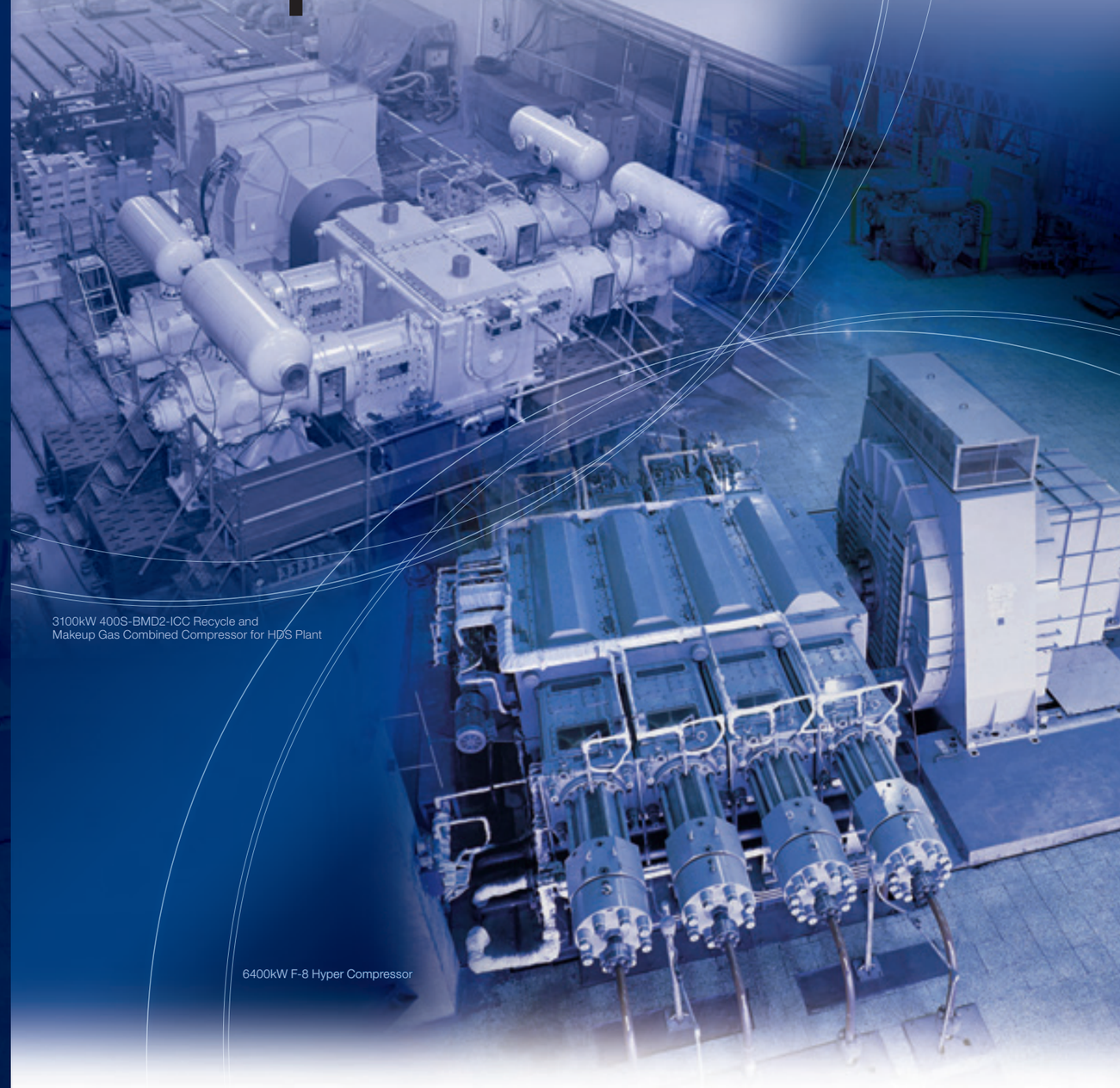

3100kW 400S-BMD2-ICC Recycle and
Makeup Gas Combined Compressor for H2S Plant

6400kW F-8 Hyper Compressor

Hitachi Plant Technologies, Ltd.

Hitachi Reciprocating Compressors

Hitachi reciprocating compressors have a history of 100 years since 1911. Hitachi manufactured Japan's first balanced-opposed compressor, a 450kW capacity unit, in 1953.

Since then, Hitachi has delivered some 4,800 balanced-opposed compressors totaling about 1,380,000kW to numerous countries around the world, including one with an output 5,500 kW and another a pressure of 54MPa virtually the highest in their class. Since 1968, Hitachi has also supplied 21 super high pressure compressors for low density polyethylene plants, including an 11,000 kW, 350MPa unit.

Hitachi Highly Reliable Balanced-Opposed Reciprocating Compressors, Based on Accumulation of Technology and Applicability to Wide Areas

Process compressors, integral equipment of plants, in a variety of applications, must be very reliable and efficient. Hitachi balanced-opposed compressors have been manufactured based on accumulated experience of over 100 years of compressor technology development, as well as based on our continued research efforts. With a background of reliable technologies built on achievements in a variety of fields, we are able to satisfy diverse customer needs.

Hitachi Reciprocating Compressor Installations Around the World

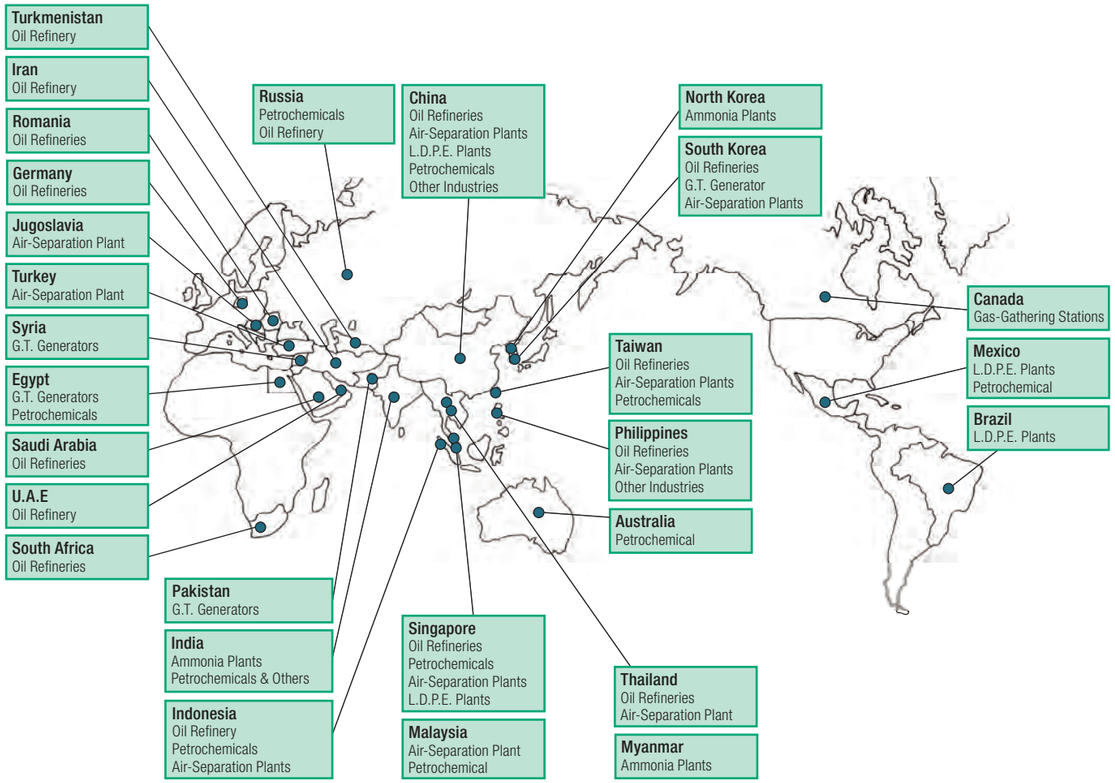

Hitachi Reciprocating Compressors Cover a Wide Range

Hitachi balanced-opposed Reciprocating compressors cover the wide range illustrated in the right chart as lubricated type and non-lubricated compressors for oil refining, petrochemicals and other industries.
And Hitachi is one of the few companies in the world that, besides conventional compressors, manufactures super-high pressure compressors capable of a maximum discharge pressure of 350 MPa.

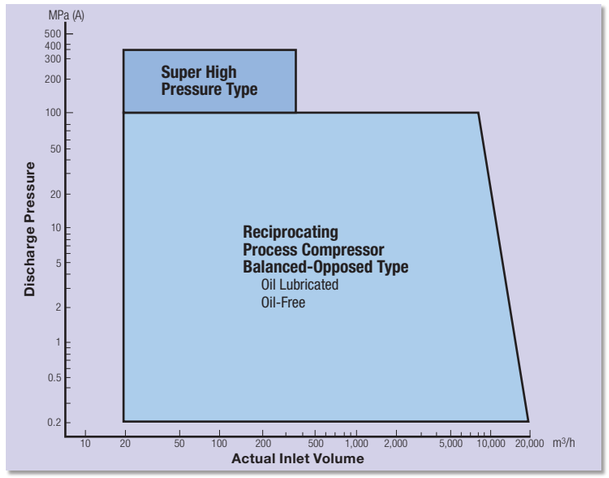

Features

Standardization

Hitachi balanced-opposed process compressors are designed in accordance with **API Standard 618** Reciprocating Compressors — the worldwide standard. All compressor frame parts are fully standardized, and cylinders are specially designed to satisfy all requirements for the operation. Main replacement parts (cylinder valve parts, rod packings, bearing metals, etc.) are always available, we can promise stable parts supply.

Reliability

Hitachi's experience means we can provide the optimum design suitable for the operating condition. In particular, materials of sliding parts like piston rings, rider rings and rod packings are selected suitably for the gas compressed. Plastic plate cylinder valves developed by Hitachi have service lives more than double those of conventional steel plate valves.

Application

Being adaptable to all gases, including hydrogen, hydrocarbon gas, oxygen and air, these process compressors are used in a wide range of areas, principally in the oil refining and petrochemical industries. It is possible to select lubricated type or non-lubricated type compressor in accordance with the process requirements.
Furthermore, we can provide special specifications, such as skid-mount type, vibration-proof common bed type and high-speed type. Please contact us for further information.

Analyzed Technology

By incorporating the results of various kinds of computerized analysis, including torsional vibration analysis and cylinder valve motion analysis, in the content of standard analysis procedures, we can accurately predict compressor performance.
In particular, Hitachi-developed digital analysis program for pulsation and vibration of piping systems, which complies with **API Standard 618**, can analyze exactly not only for piping systems of newly installed compressors but also for total piping systems, including existing compressors.

Pulsation Analysis Technology for Piping Systems

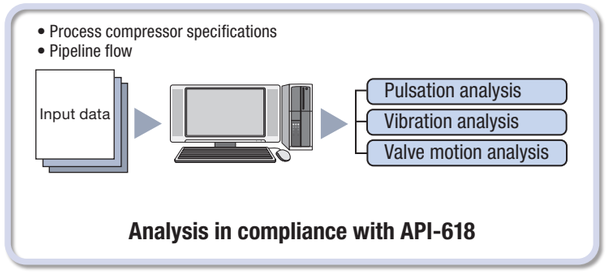

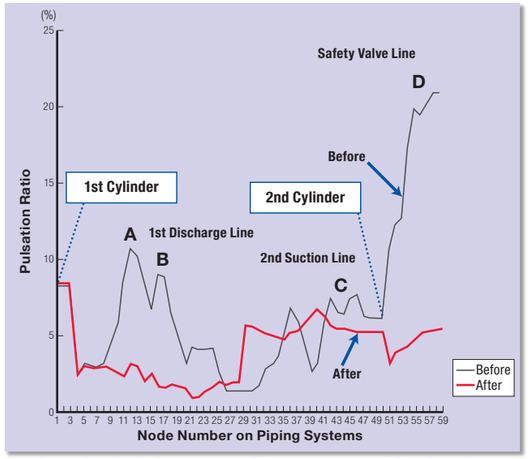

Pulsation Ratio Between 1st Discharge and 2nd Suction Line (Comparing Before with After Orifice Installation)

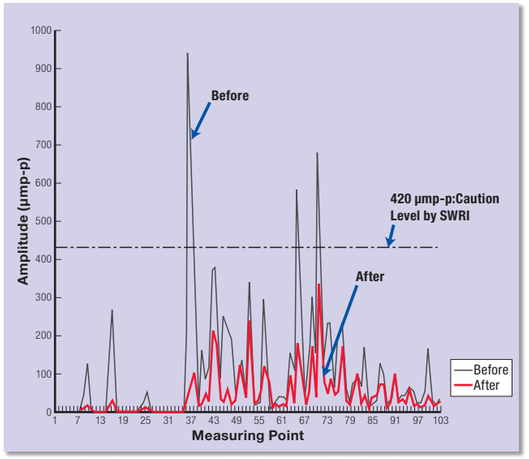

Vibration Amplitude Distribution of Piping Systems (Comparing Before with After Orifice Installation)

Structure of Balanced-Opposed Reciprocating Compressor

Since the compressor is a balanced-opposed type in which a pair of cylinders is arranged in opposed position, vibration-free operation is ensured.

1. Simple foundation
2. Economical operation-small-sized, light-weight compressor and electric motor
3. Easy installation and maintenance
4. Economical design - useable as multipurpose compressor

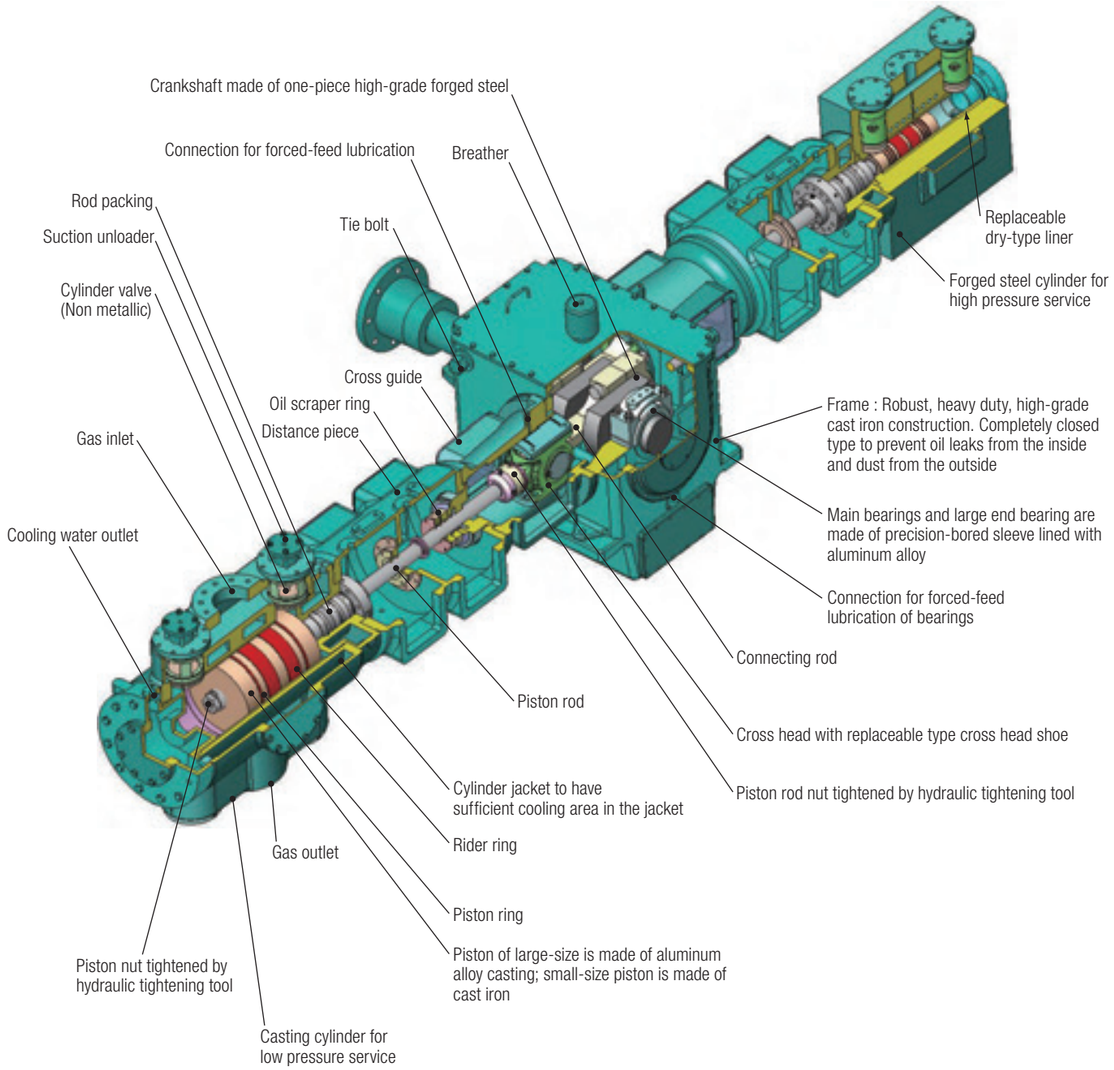

Hitachi Non-Metallic Valve

Long Life

Low Noise Level

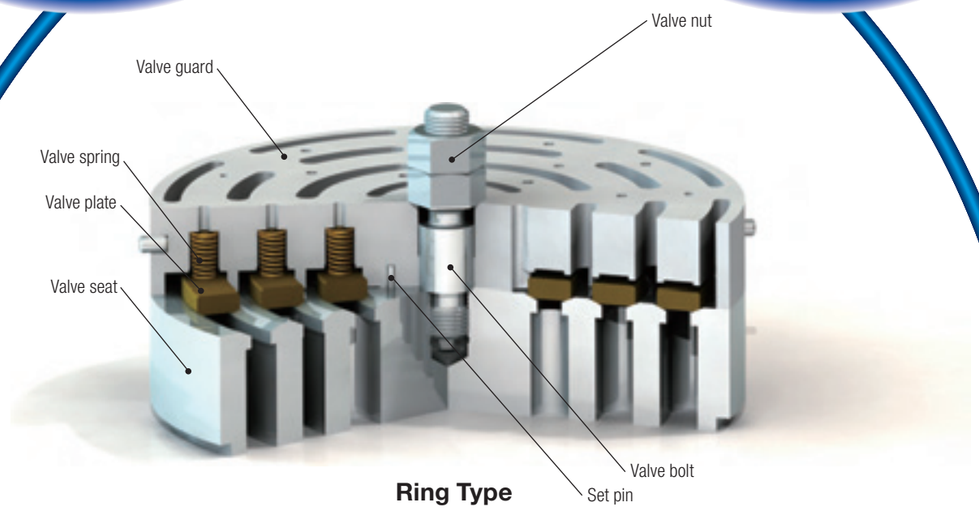

Ring Type

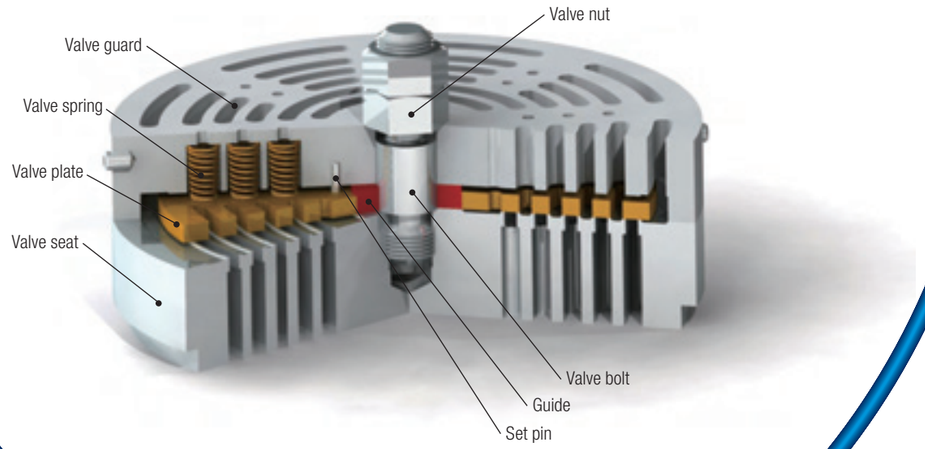

Plate Type

Saving Energy Consumption

Lower Maintenance Cost

Hitachi Sliding Parts

Safety Operation

Proper Material Selection

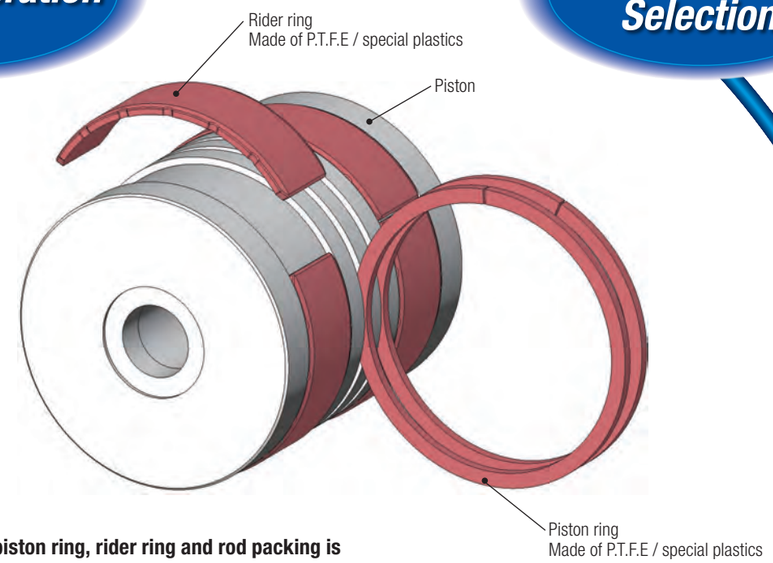

The sliding part such as piston ring, rider ring and rod packing is designed at the most suitable shape and material by taking account of lube condition, gas composition, gas pressure and temperature etc.

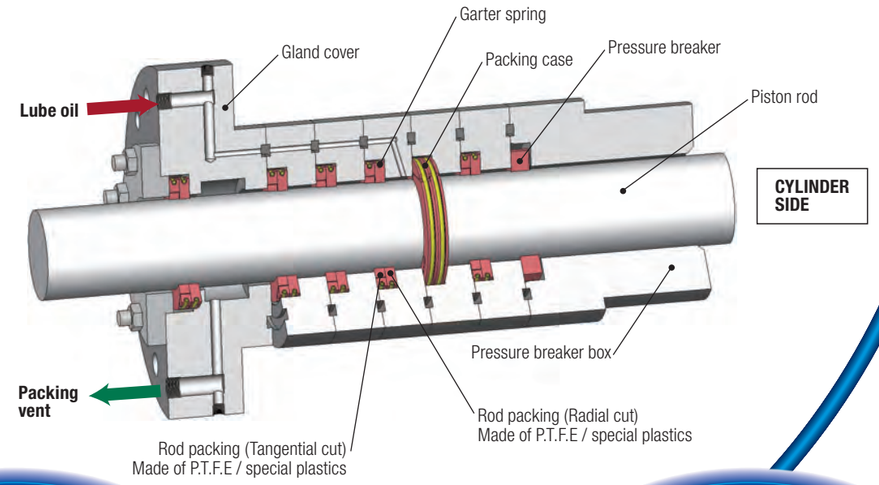

Highly Reliable Seal

Easy Maintenance

Main Bearing and Large end Bearing made of Aluminum Alloy Lining

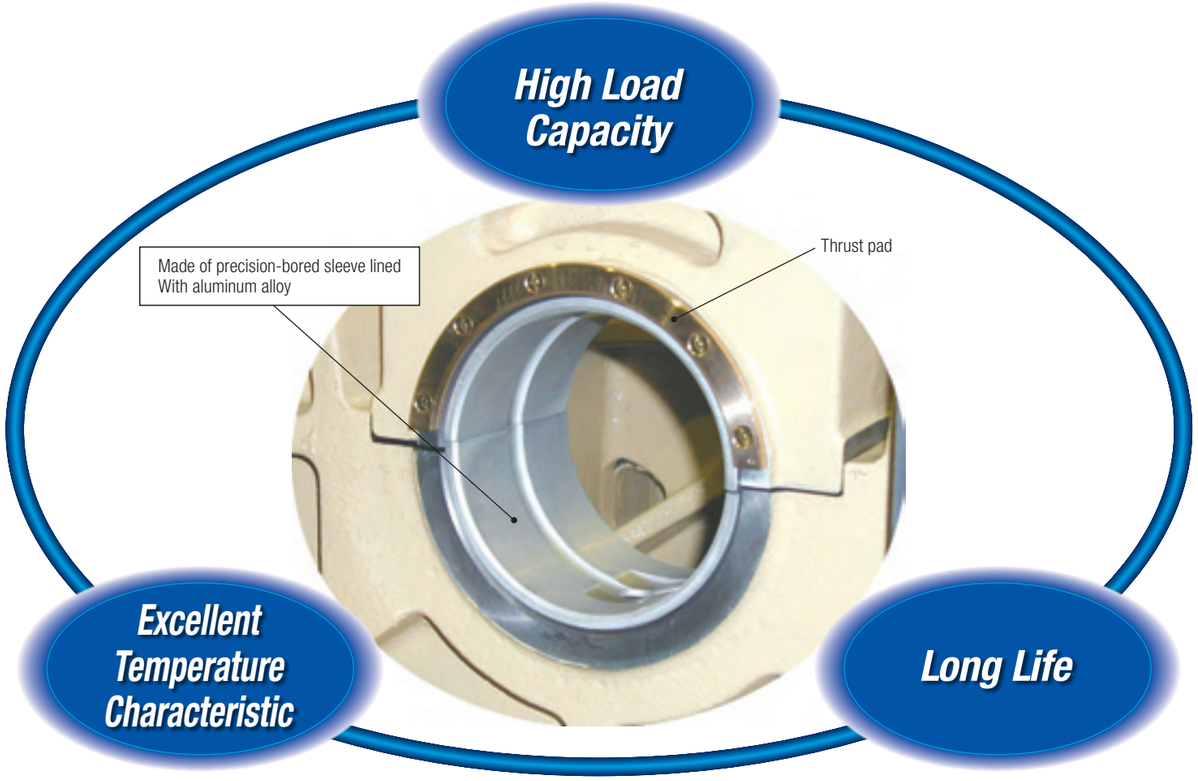

High Performance Oil Scraper Ring Assembly

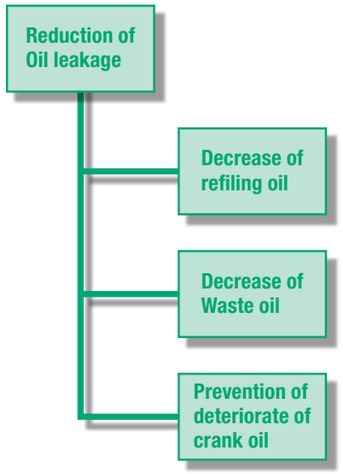

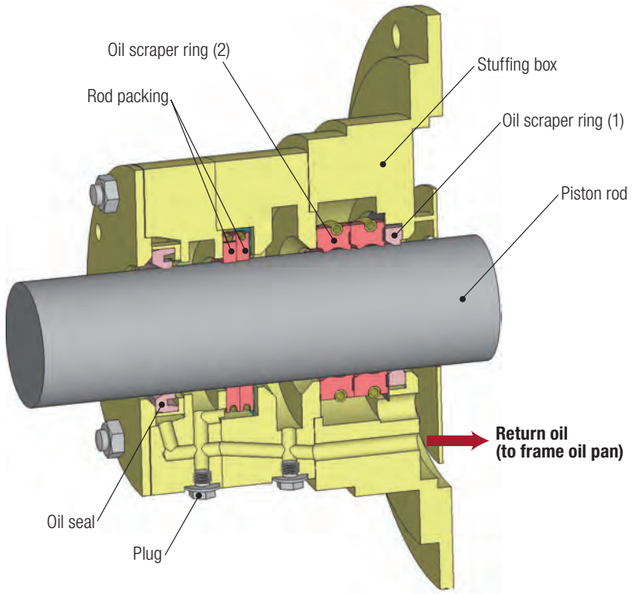

Hydrulic Tightening Method For Piston Nut And Piston Rod Nut

It can be proper management for vital-parts by hydraulic tightening method.

- Proper tightening force
- High reliability at assembly work
- Easy maintenance work

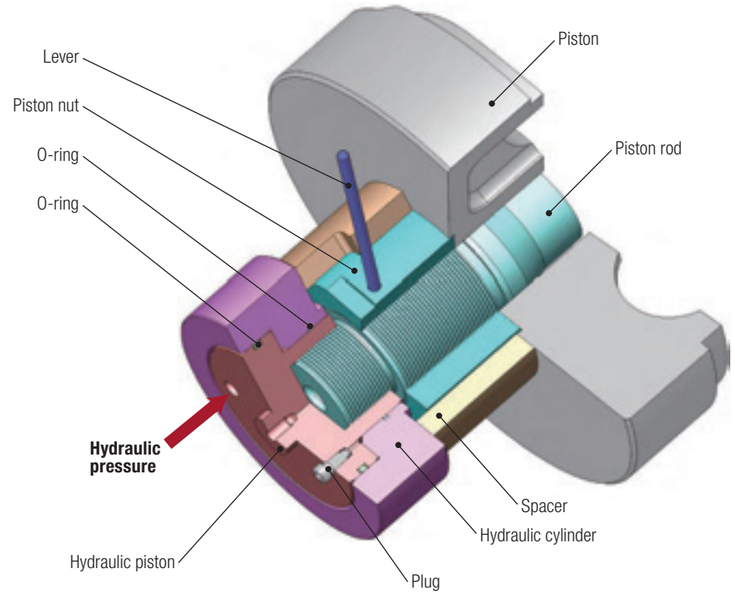

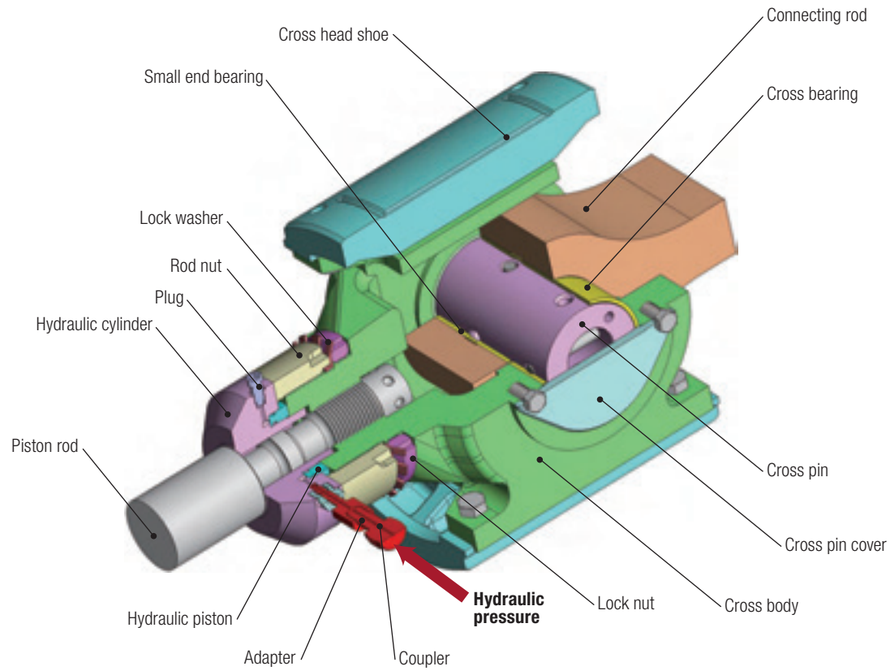

Hitachi Reciprocating Compressor Series

Hitachi reciprocating compressor model numbers comprises of 9 blocks (letters) as follows;

(1) (2)(3)(4)(5) (6)(7)(8)(9)

315S - BTD2 - NICC

(1) This prefix number indicates the frame number.
There are 8 **frame numbers** (nominal frame sizes) as shown in the table of next page.
(2) The letter indicates the type of compressor like as **B**alanced-opposed type, **H**orizontal type or **V**ertical type.
(3) The letter indicates the number of stages like as **S**ingle stage, **T**wo stage, **3**, **4**, **5**, **6** — stage or **M**ulti-service (combined) compressor.
(4) The letter indicates the acting type of compressor like as **D**ouble acting, **S**ingle acting or **T**andem cylinder arrangement.
(5) The letter indicates number of cylinder like as **No letter** : 2 cylinders, **t** : 3 cylinders, **2** : 4 cylinders, **f** : 5 cylinders,
3 : 6 cylinders or **4**: 8 cylinders.
(6) The letter indicates type of cylinder like as **No letter** : Lubricated or **N** : Non-lubricated.
(7) The letter indicates type of cooling like as **W** : Water cooled cylinder without intercooler,
I : Water cooled cylinder with Intercooler or **A** : Air cooled.
(8) The letter indicates type of driving method like as **C** : Direct coupled with driver, **R** : Driven through V-belt or **G** : Driven through gear reducer.
(9) The final letter indicates **C**ompressor.

For Example:

400S-BMD2-ICC This model means;
Frame size: 400S
Type: Balanced-opposed, Combined Service (Makeup & Recycle Gas) type
Cylinder: Double acting 4 cylinders
Cooling: Water cooled and with Intercooler
Driving: Directly coupled with motor driver

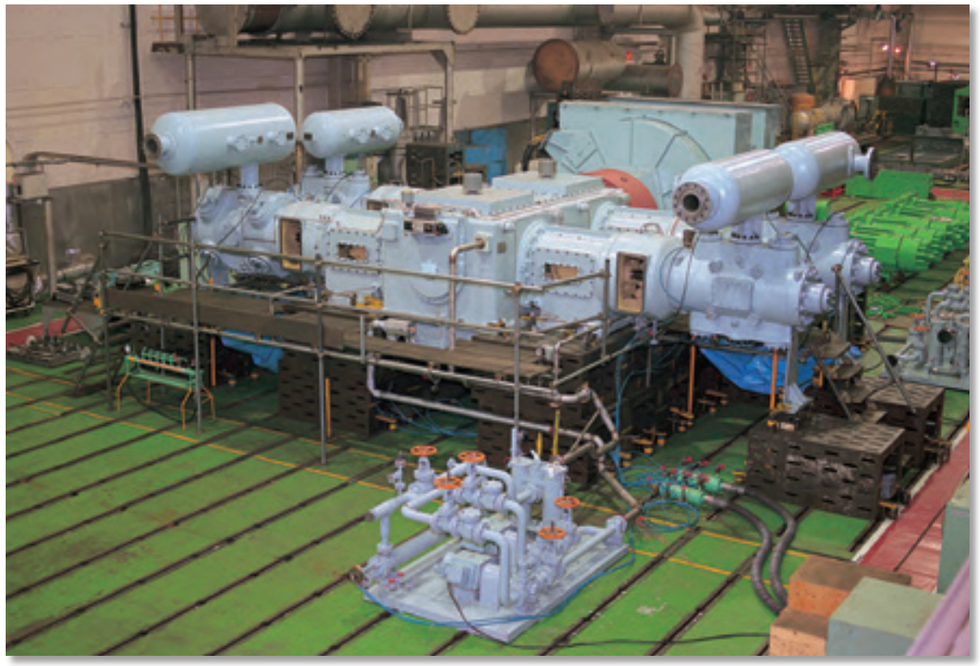

Standard Dimensions

Eight (8) sizes of standard frames are available for Hitachi balanced-opposed process compressors to allow selection of the optimum compressor for specific operating conditions. Efficient and economical process compressors can be chosen based on the best combination of cylinders properly designed for the capacity, operating pressure and gas.
The application range and standard external dimensions of Hitachi balanced-opposed process compressor series are shown in the table below.

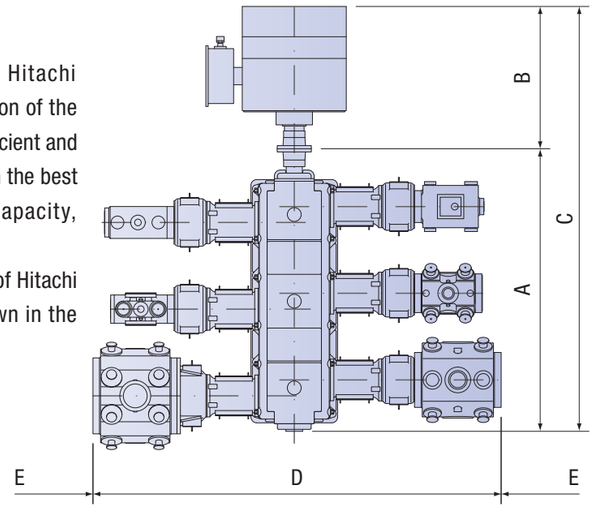

Frame No.	Max. motor power (kW)	No. of Throw	A (mm)	B* (mm)	C* (mm)	D** (mm)	E*** (mm)
HH160S	1600	2	1400	2000	3400	4800	1300
		4	3300	2200	5500		
200S	1200	2	1400	2200	3600	5000	1500
		4	2800	2300	5100		
		6	4200	2500	6700		
224S	1500	2	1500	2300	3800	5300	1600
		4	3100	2500	5600		
		6	4700	2700	7400		
250S	2100	2	1600	2400	4000	5900	1700
		4	3300	2700	6000		
		6	5400	2900	8300		
280S	2700	2	1700	2500	4200	6400	1800
		4	3500	2800	6300		
		6	5700	3000	8700		
315S	3600	2	1800	2700	4500	7000	1900
		4	4200	3000	7200		
		6	6100	3300	9400		
355S	4500	2	2000	2900	5000	7600	2000
		4	4500	3200	7700		
		6	6500	3500	10000		
400S	9000	2	2500	3000	5500	8500	2200
		4	5000	3500	8500		
		6	7000	4000	11000		

* Depends on the motor to be used.
** Indicates standard dimensions in case of the single distance piece.
*** Piston assembly removal dimension (Single distance piece case)

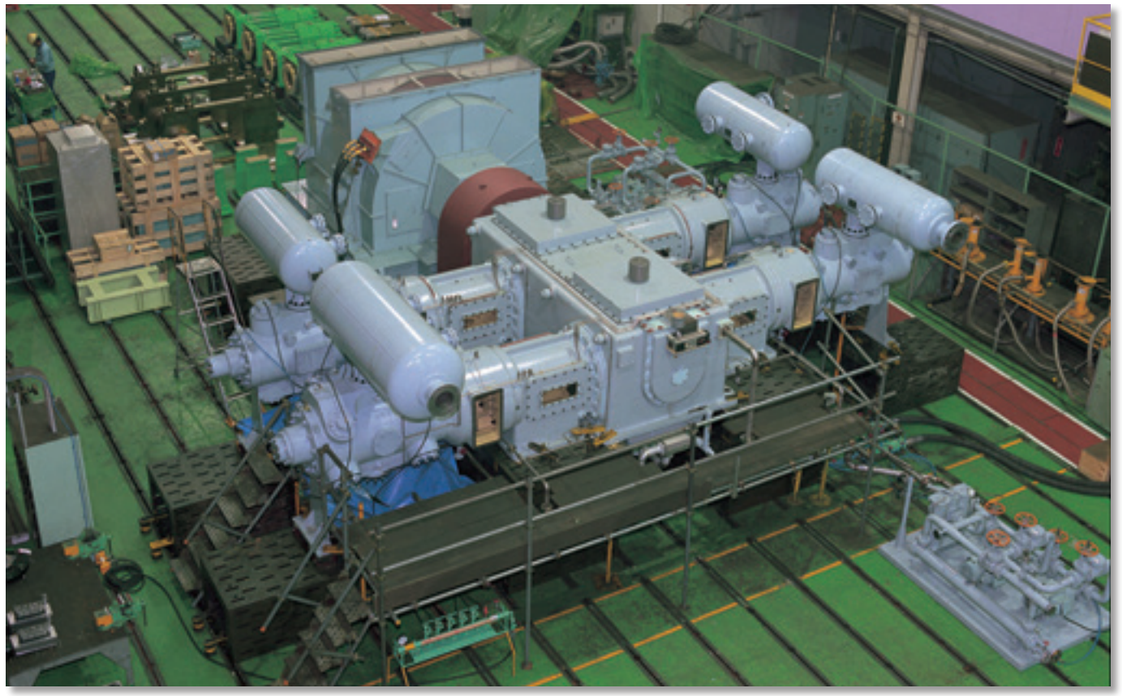

3100kW 400S-BMD2-ICC Recycle and Makeup Gas Combined Compressor for HDS Plant

1600kW 280S-BTD-NICC Hydrogen Booster Compressor for Catalytic Reformer Plant

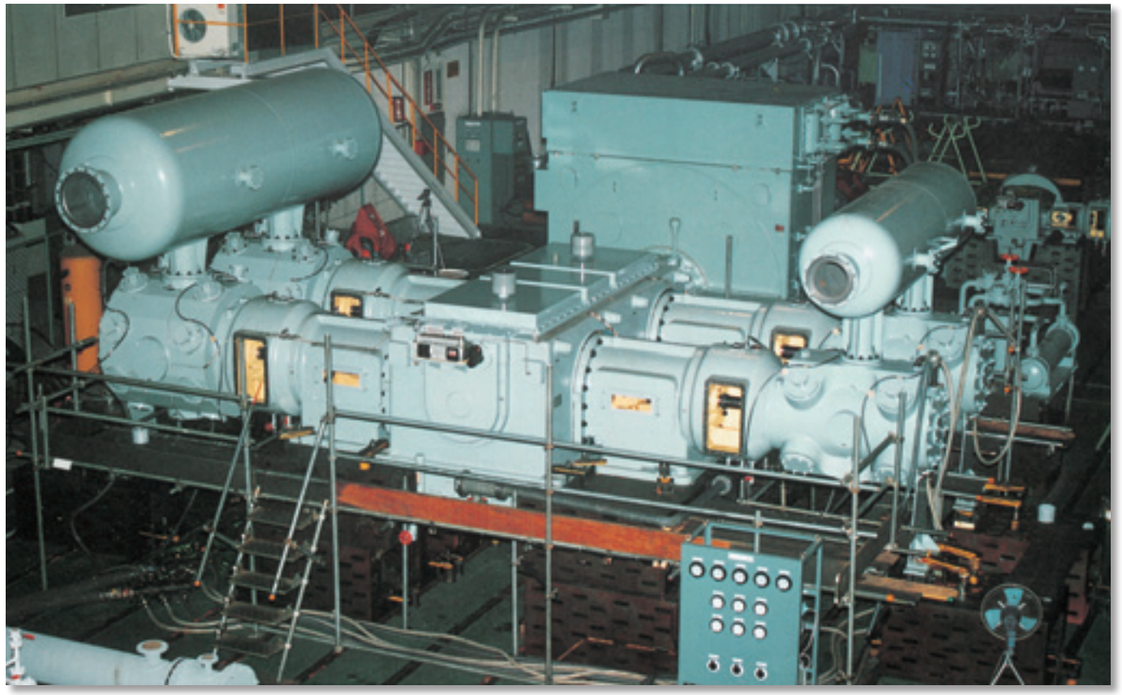

3400kW 400S-BTD2-ICC Net Gas Compressor for CCR Reformer Plant

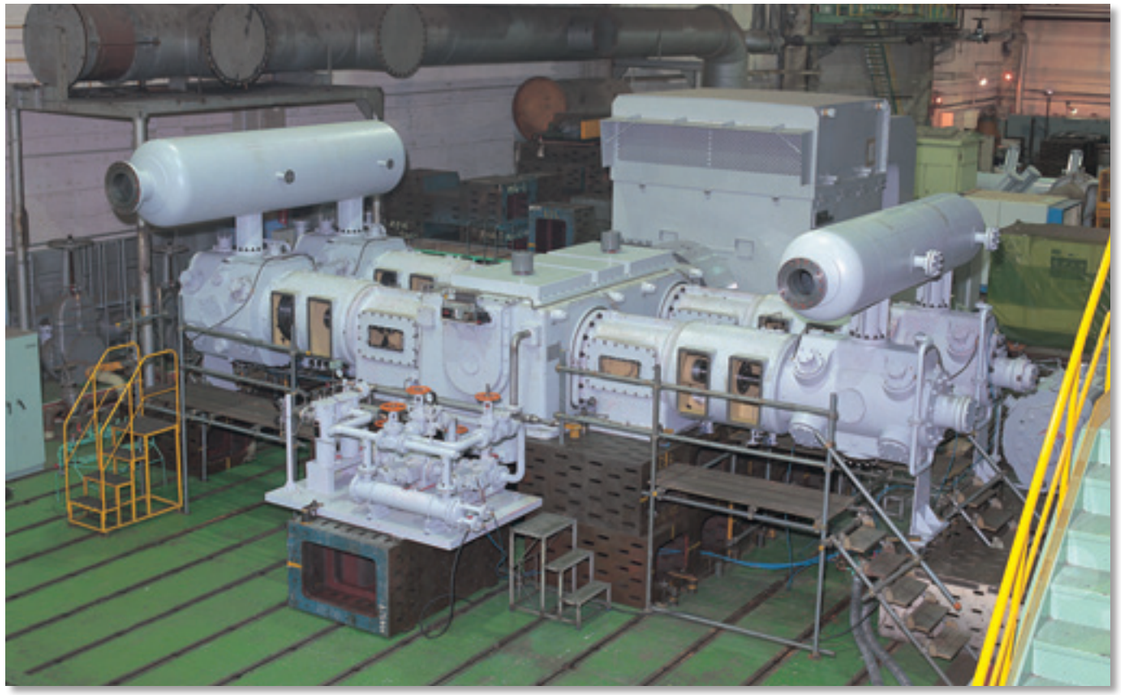

3100kW 400S-BTD2-ICC Net Gas Compressor for CCR Reformer Plant

Oil Refinery Plants

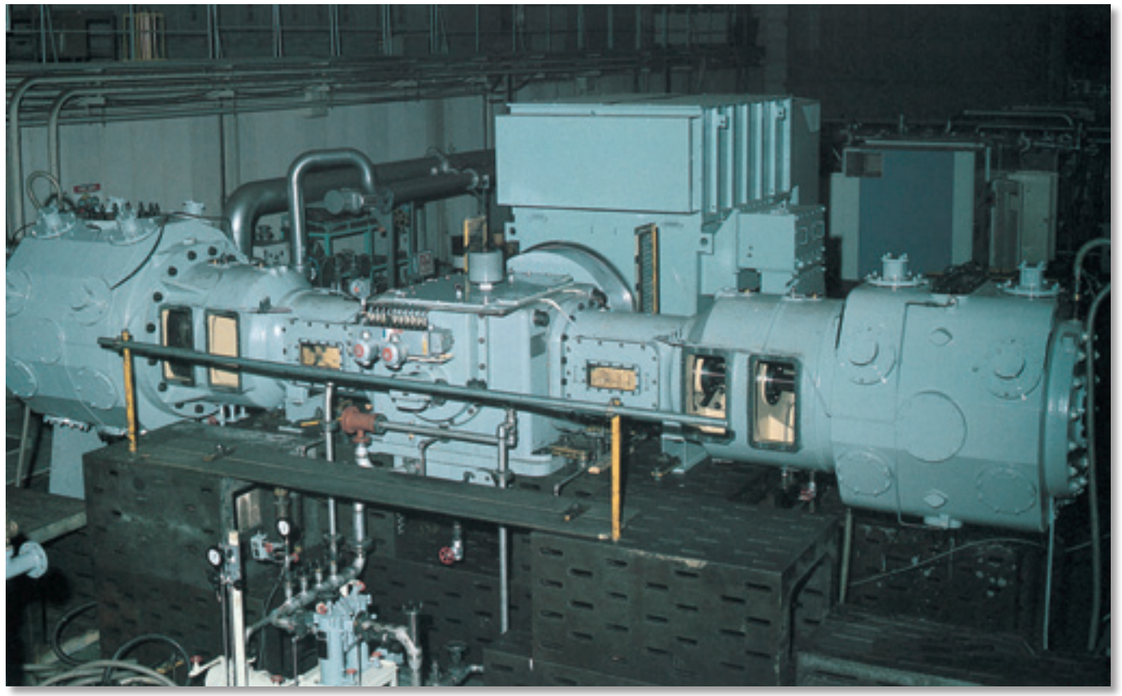

760kW 315S-BTD-ICC Off Gas Compressor for Hydrogen Plant

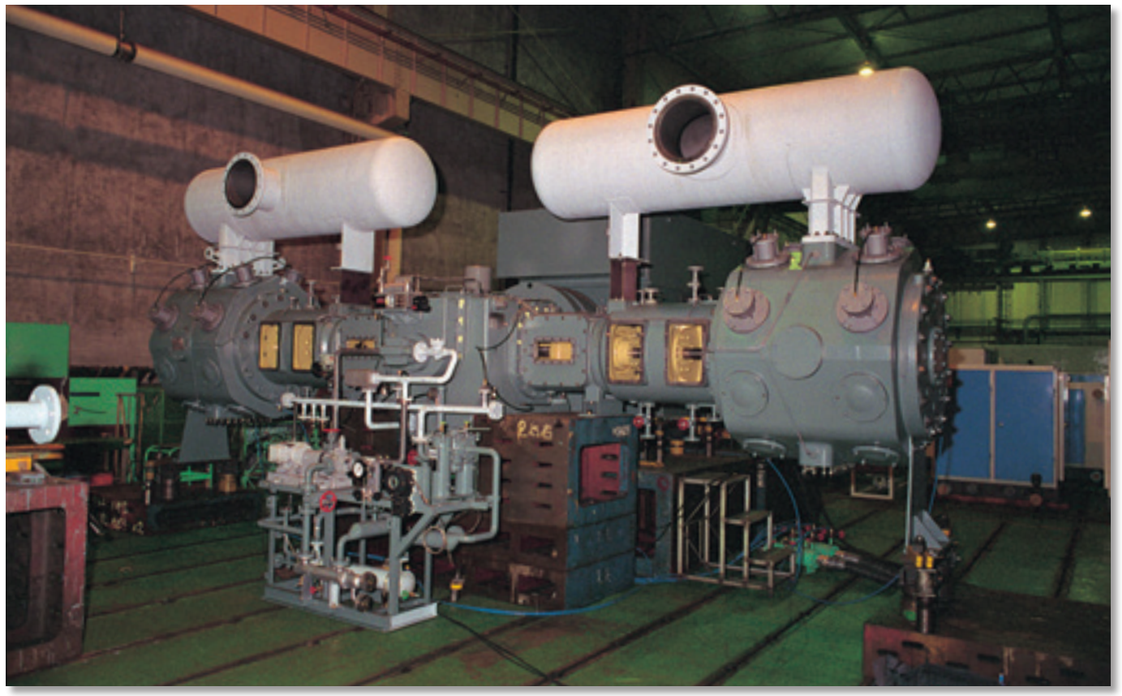

610kW 280S-BSD-WCC Off Gas Compressor for Off Gas Recovery Plant

Petrochemical Plants

LDPE PLANT

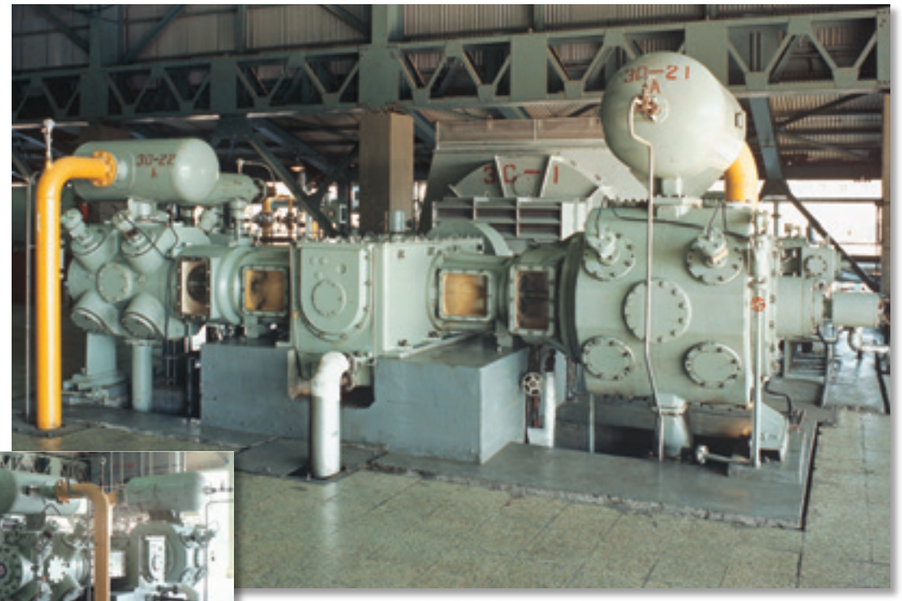

1300kW 280S-B6Df-ICC Primary Compressor

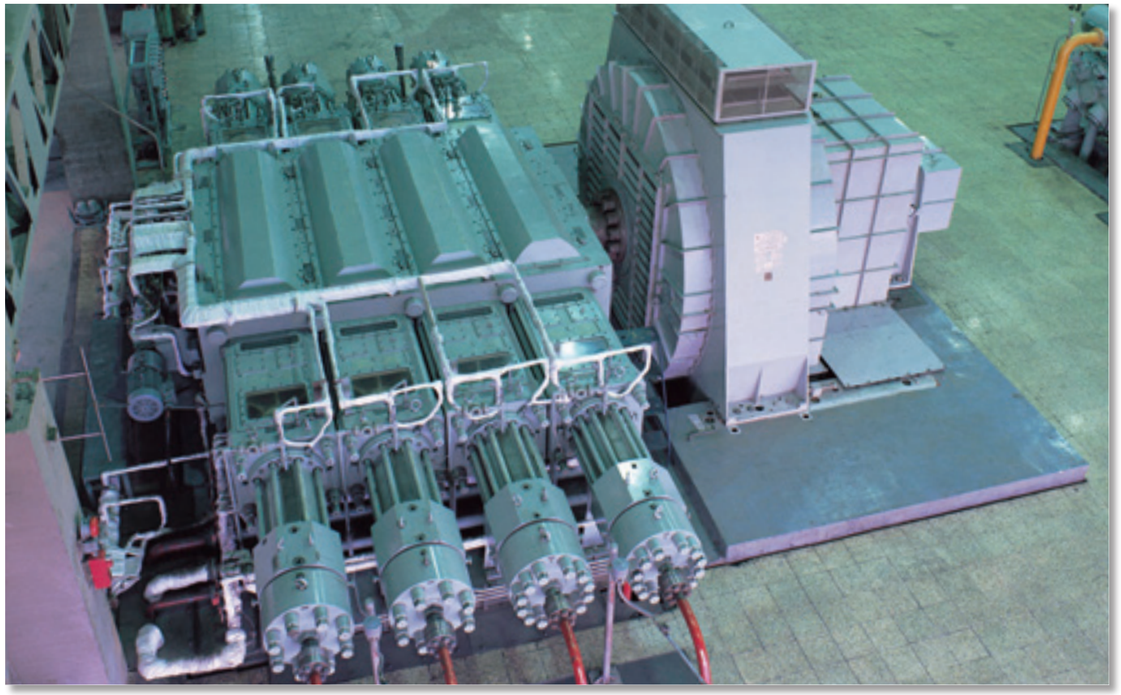

6400kW F-8 Hyper Compressor

Petrochemical Plants

BDO (BUTANEDIOL) PLANT

815kW 280S-BTD-NICC Hydrogen Compressor

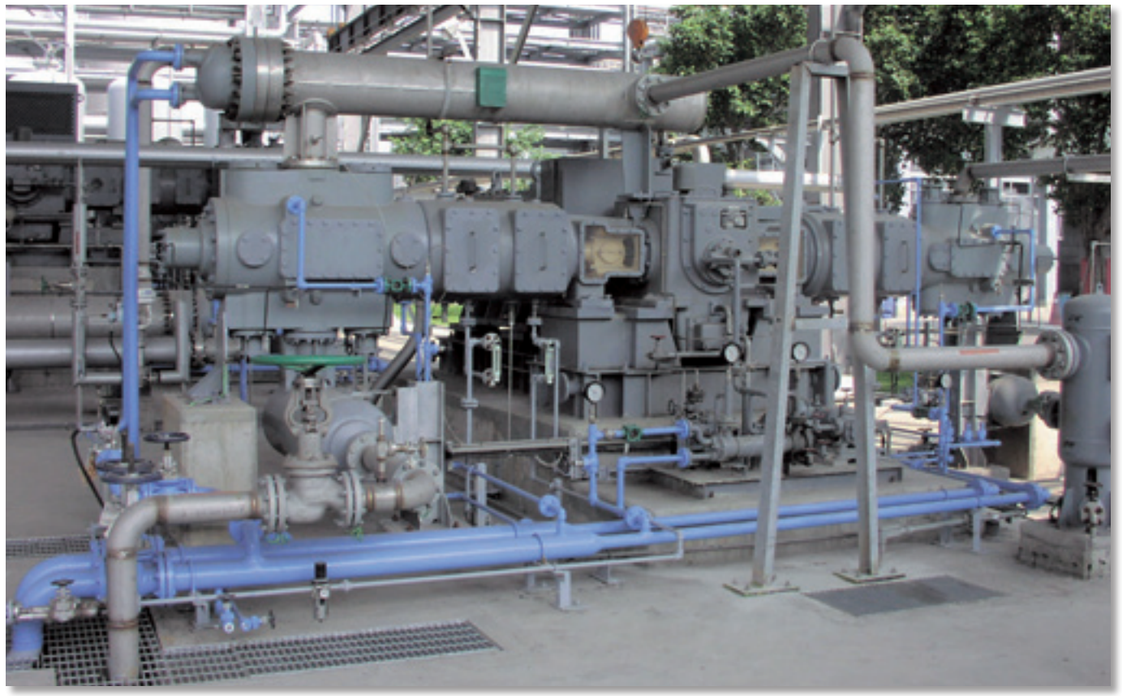

400kW 200S-BTD-NICC Hydrogen Compressor

ETHYLENE PLANT

4300kW 400S-BMD4-IMC Ethylene/Propylen Cascade Refrigeration Compressor

SYNTHESIS PLANT

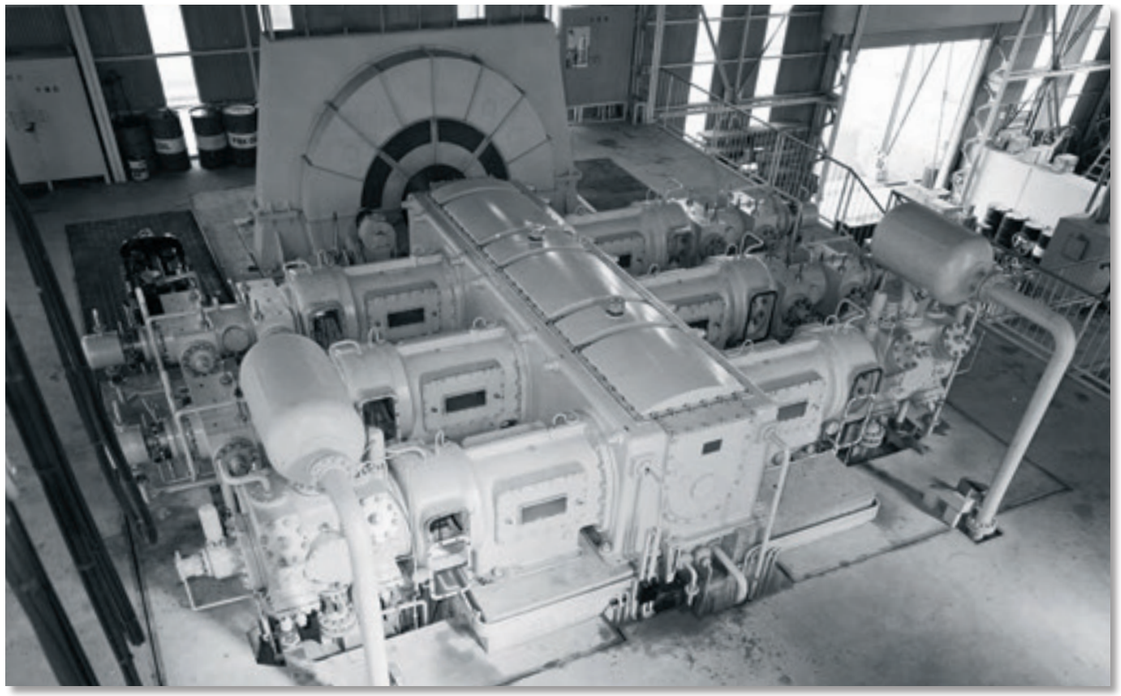

5500kW 400S-B3D3-IMC Ammonia Syn-Gas Compressor

Various Applications

780kW 250S-BTD-NICC Fuel Gas Compressor for Gas Turbine

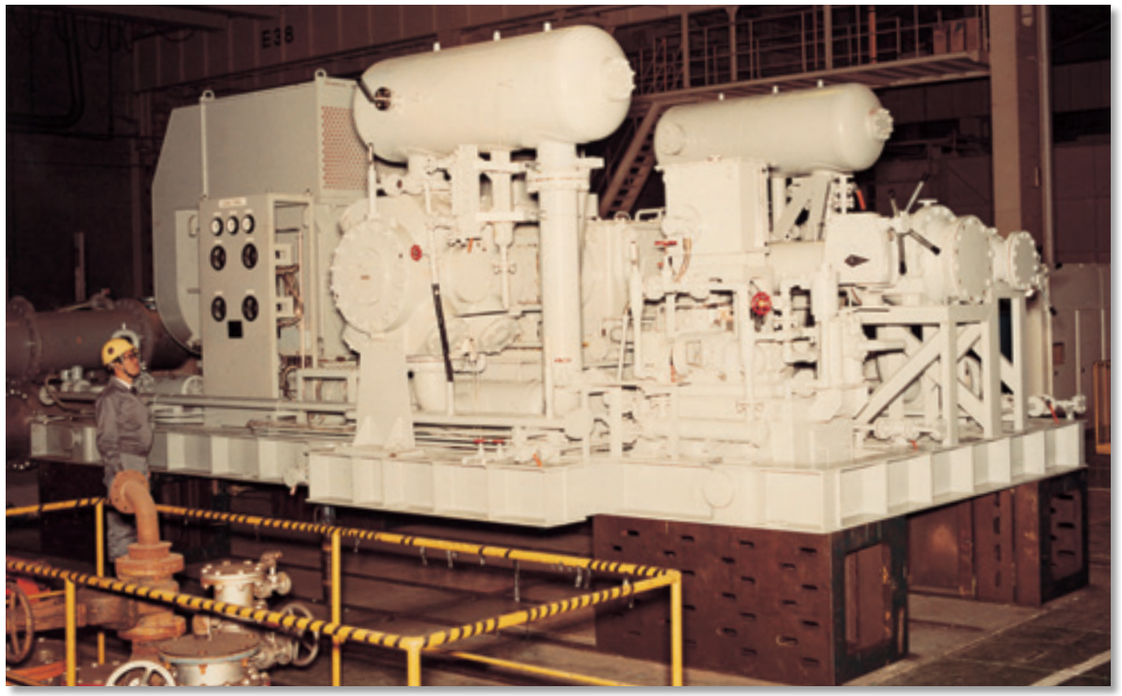

850kW High Speed Fuel Gas Compressor for Gas Turbine

450kW 200S-B3Dt-NICC Air Compressor for PET Bottle Plant

1400kW 355S-BTD-ICC Natural Gas Compressor for City Gas (SNG) Plant

1200kW 250S-B3D2-NICC Oxygen Compressor for Air Separation Plant

780kW 200S-BSD2-WCC Diesel Engine & Electric Motor Drive Compressor for City Gas Plant